Individual Notebook: Jayden Pearson

1/21/2026:

- Talked with professor and he approved our idea of school pick-up line project
- Discussed high-level idea of project and how our system will work
- Agreed on using license plate recognition as our first idea, facial recognition as back-up
- Still figuring out how we are going to connect the pi with our laptop
    - Came up with wireless bridge using two ethernet antennas
- Everyone present

1/28/2026:

- Created FEDC team for future prototyping, machining, and soldering
- Decided on meeting times next week at the elementary school to go ask them questions
- Discussed and wrote our Needs Questions, Needs Statements, and Objective Statement
- Looked into Pebble Creek Elementary School's current pickup line situation
- Got a better idea of how our system is going to work, specifically that we could use colored sticks for the kids to grab
- Everyone present

2/2/2026:

- Finished up our needs statement and objective statement
- Worked on requirements and the metrics we could expect in our system for example what % improvement we could aim for compared to current pick-up line time
- Discussed the power requirements our system will need, and what options we could realistically implement (rechargeable battery preferably but worst case long extension cord)
- Everyone present

2/4/2026:

- Submitted needs statement and objectives
- Finished up requirements and environmental constraints. Talked about how our system needs to be weatherproof and portable.

- Discussed our connection device between the pi and the server, potentially bluetooth antenna, wifi extender, or ethernet bridge. We need to ask the professor about his thoughts, since we need our connection to be unbreakable.
- Talked about how our system will work, specifically that we will process the camera images on the pi and only send successful plate numbers to the server.
- Everyone present

2/9/2026:

- Took 5 dysfunctions of a team quiz.
- Created the high-level block diagram:

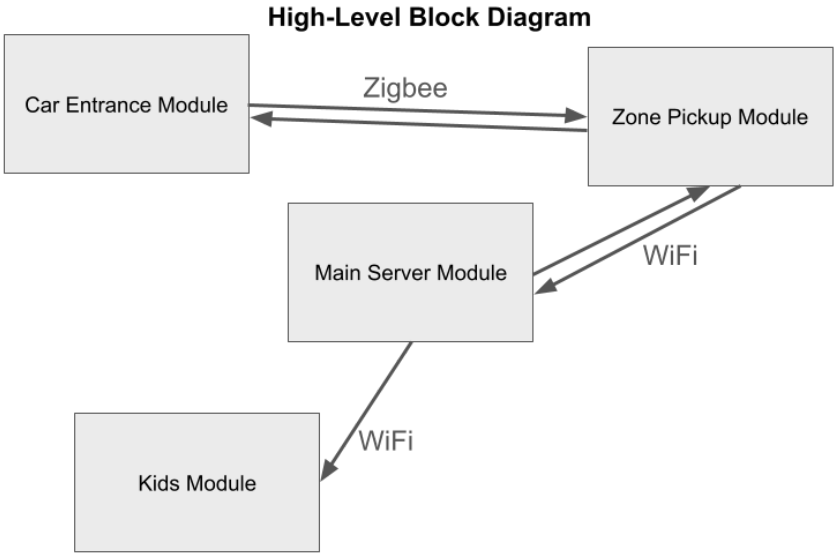

  -
- Created a monday account to keep track of tasks and things we need to get done.
- Received some parts like raspberry pi, displays, and cameras from TA.
- Submitted requirements.
- Delegated technical responsibilities.
- Discussed possible zigbee configurations for connections between devices.
- Everyone present

2/11/2026:

- Presented proposal and finalized our proposal report
- Received feedback about proposal and updated our block diagram, requirements, and literature review

- 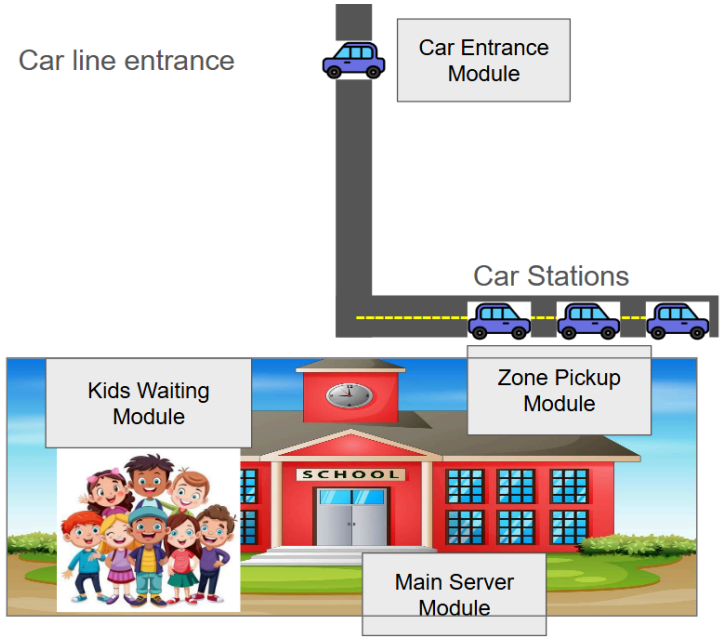

- Made a plan for next week, when project starts
  - Start database and website backend/frontend
- Everyone present

2/16/2025:

- Met with professor, discussed possibility of license plate vs qr code recognition
  - Also simplified our design by getting rid of most zone pickup module hardware
- Assigned tasks to each member for the week
  - I am tasked to model hardware in CAD
- Set up database
- Started designing frontend of website
  - Different screen, tabs, functionality
  - 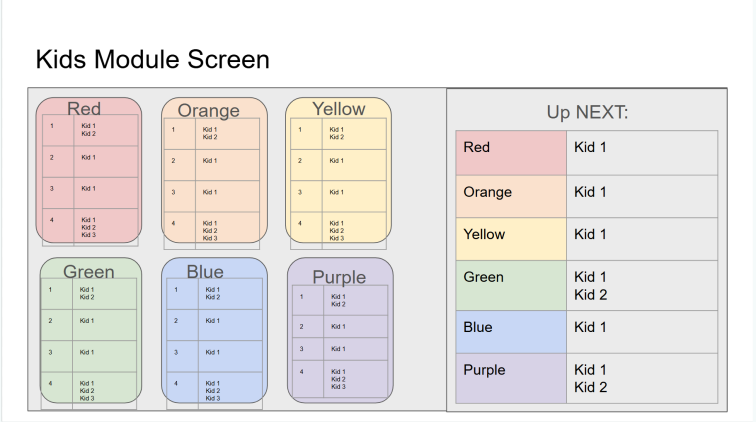

- Ordered parts
    - Haya ordered parts from Amazon
- Everyone present

2/18/2026:

- Got pi setup and able to use
- Tested to ensure display works
- Got camera working initially, but it stopped working
    - Tried lots and lots and lots of troubleshooting
        - Camera is non functioning at this moment
- Setup row level security for website
    - Also picked website theme
- Created OnShape folder to begin designing 3D housing
- Continued working on website frontend design
- Everyone present

2/23/2026:

- Received all parts
- Flashed one of the zigbee antennas as a coordinator
- Got pi camera back up and running
- Worked on website frontend and uploaded changes to github
- Discussed with professor about not using license plate recognition
    - Planning on using QR code reader
- Started designing 3D housing

- 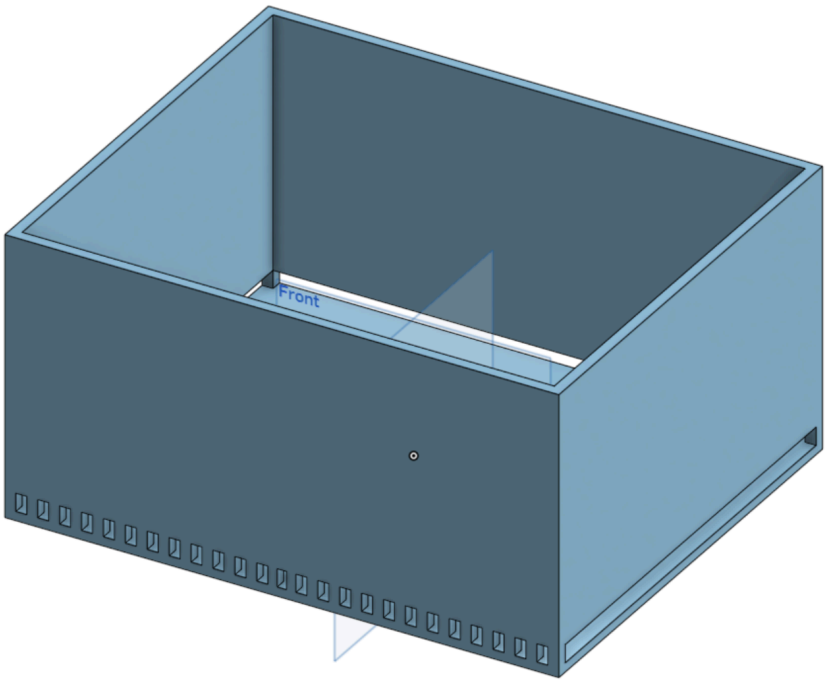

- Everyone present

2/25/2025:

- Finishing up website frontend
  - 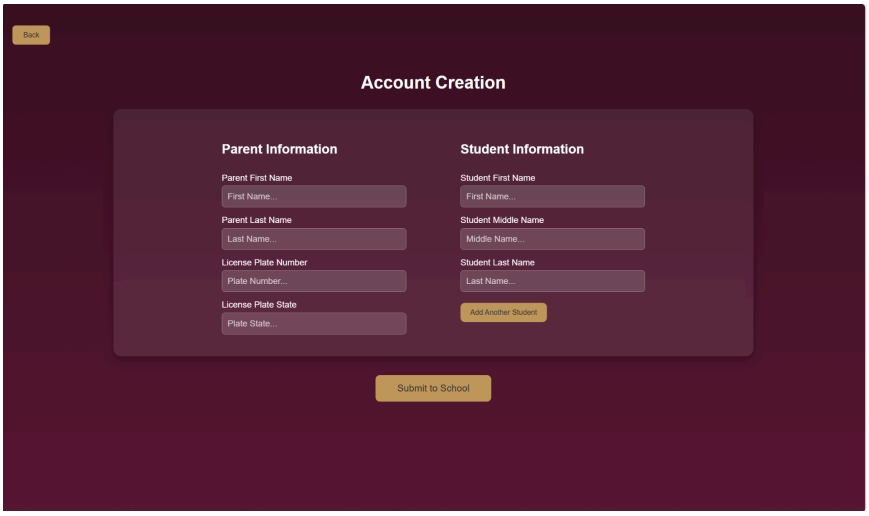

- Got Zigbee configured and initially setup, and got two antennas paired
  - Still need to work on connecting pi and laptop to zigbee
    - Going to be a very confusing and long process for this
- Further development of 3D housing

- 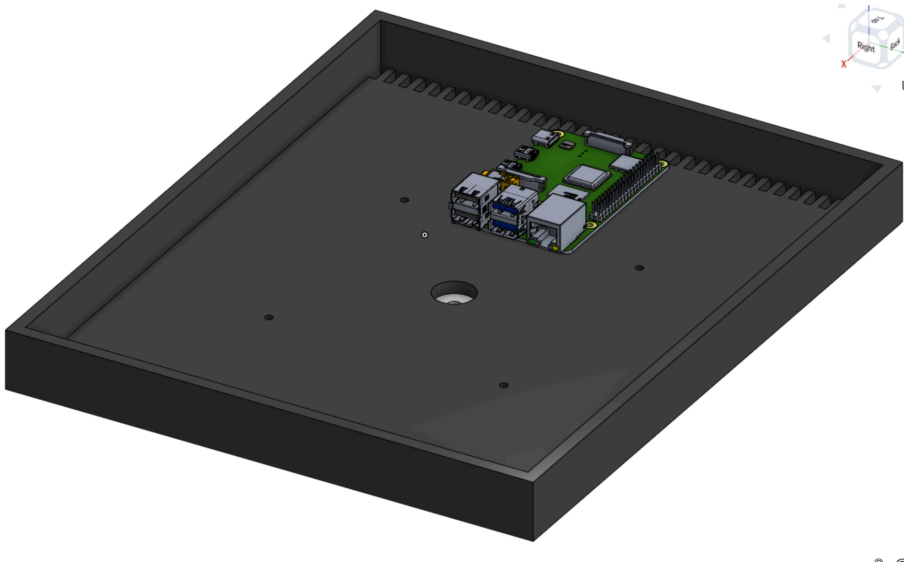

- Discussed next plans for what everyone is doing
    - I am going to measure all hardware in the FEDC and model parts in CAD
- Everyone present

3/2/2026:

- Had weekly meeting, showed our website frontend designs
    - Feedback was good, said we were on track
- Continued development of 3D housing
    - Added screen and raspberry pi mount
    - Need to redesign bracket that connects to tripod
    - Added camera
    - Need to add zigbee antenna mount

- 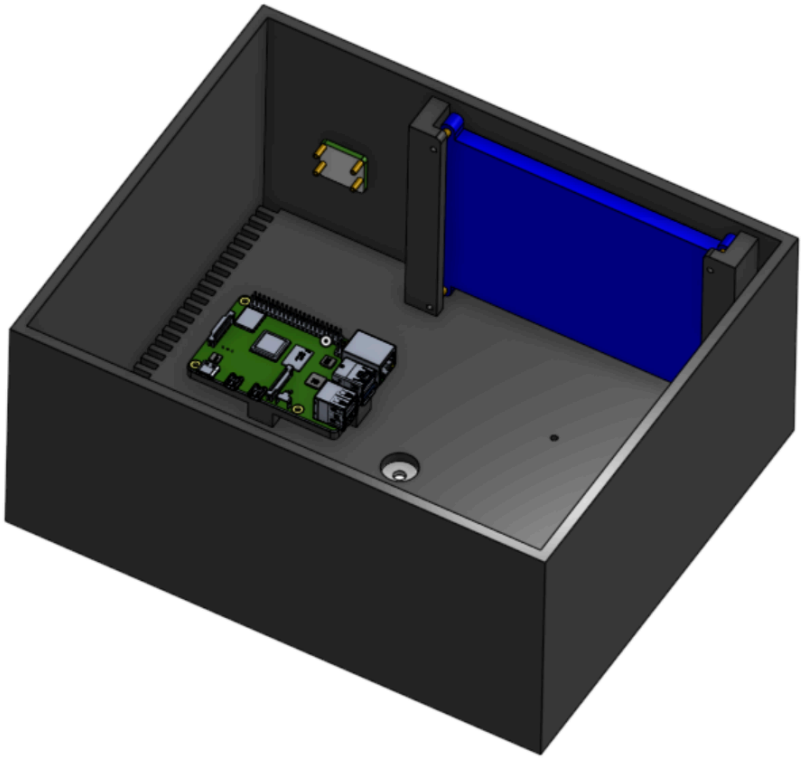
- Kept on developing website fronted pages
- Everyone present

3/4/2026:

- Started on CDR Report
- Continued making progress on our website
  - Improved frontend and backend functionality
  -

- Added battery and battery mount to housing prototype
    - 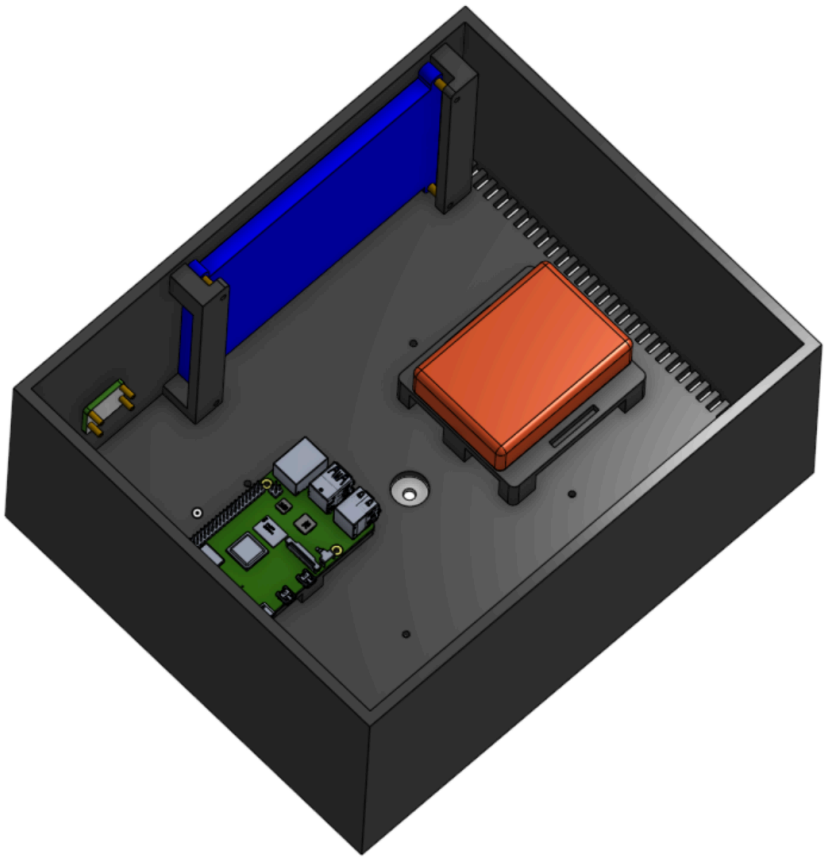
- Discussed what everyone is tasked with over spring break
    - I will finalize 3D housing
- Everyone present

3/16/2026:

- Gave CDR presentation
- Finishing up CDR report
    - I did complete system description and module-wise specifications
- Finalized 3D housing for car entrance module
    - Will submit it to be printed to receive on wednesday
    - Still need to add top of housing
        - Possibly using hinge

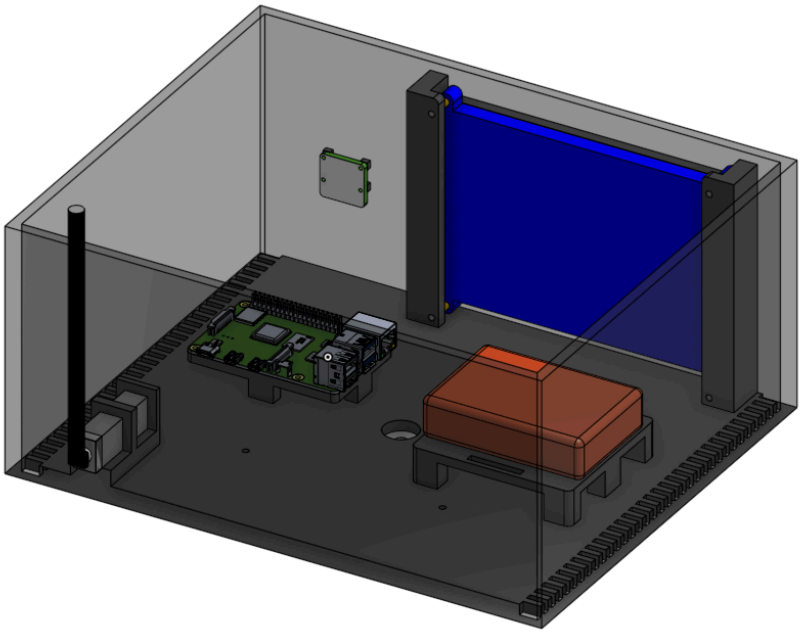

- Started looking into our server implementation
    - Could use windows server to setup a client-server connection
- Everyone present

3/18/2026:

- Submitting 3D housing prototype to FEDC to be printed
    - Will ensure all parts fit and prototype will work
- Started downloading server software
    - Windows server and virtualbox for the server side
    - Remote desktop connection from client side

- Everyone present

3/23/2026:

- Setup windows server and virtual machine
- Tried submitting 3D print file to be printed
    - Worker said format doesn’t work
    - Need to shorten the width by 10mm
- Added QR codes to the website
- Everyone present

3/25/2026:

- Worked on resizing physical housing to fit specifications FEDC worker stated
- QR code reading implementation is in progress
- Server setup and connected to database
    - Also updates website (work in progress)
- Everyone present

3/30/2026:

- Met with professor for weekly meeting, need to make physical housing smaller
    - More compact, too much wasted space
    - Put camera closer to screen
    - Put hardware closer together
    - Let screen (largest hardware component) determine housing size
- Worked on server setup
    - Remote connection from client not working yet, need to troubleshoot
- Everyone present

4/1/2026:

- Met with pickup line teacher from elementary school
    - He described the system they use
    - Got positive feedback on our design
- Continue working on physical housing
- Everyone present

4/6/2026:

- Redesigned whole physical housing

    - Got approval to print from professor
    - 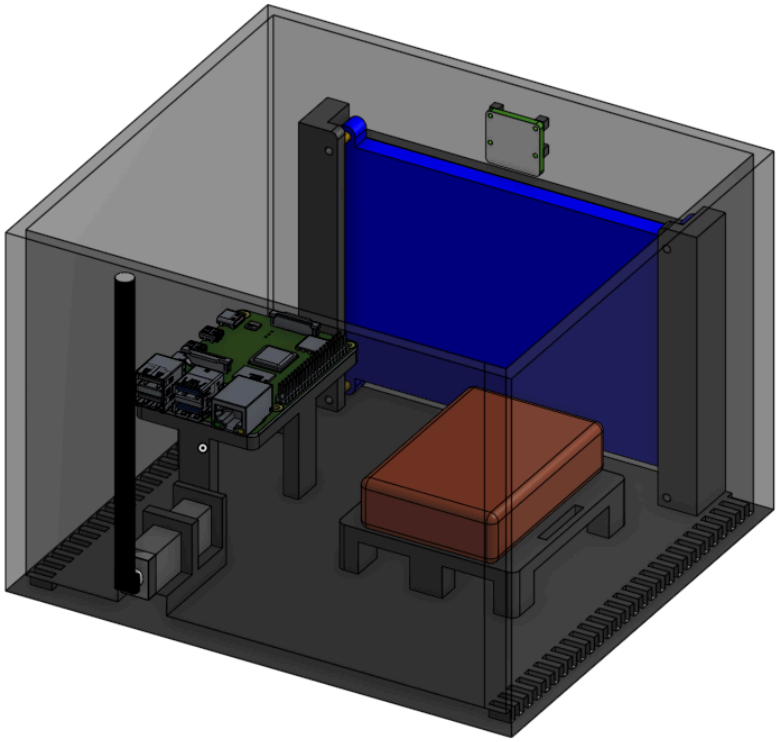
- Decided it would be best to only do QR code
    - For 100% success rate
- Got server to work
    - Able to ping it from other devices
- Everyone present

4/8/2026:

- Got remote desktop connection to work for our server
    - Connection from server to database and website still nonfunctional
    - Website can be updated locally from server but not from another device
    - Deployed server to be run from render
        - Possibly fixed our issue
        - It did fix our issue
    - Server can now be updated with data and be seen on our public website
- 3D prototype finished printing

    - $15.36 for 1 prototype
    - Will pick up today
- Everyone present

4/13/2026:

- Got first prototype of box, needs to be changed a good amount
    - Add more clearance on screen for hdmi port
    - Compress whole box more since it is a little large
    - Remove material for pi and battery mount to lessen supports needed
        - Makes it easier to print and assemble
    - Keep the same height where screen is, and then drop off top for everything else to save space
    - Increase camera mount hole sizes
        - Also make lens stick further out to not cut off some of picture
- Everyone present

4/15/2026:

- Got the pi communicating with the server and website successfully, just dummy data right now
- Working on automating the QR code scanning process
- Redesigned almost everything on the physical housing
    - Compressed components
    - Reduced material
    - Also added lid

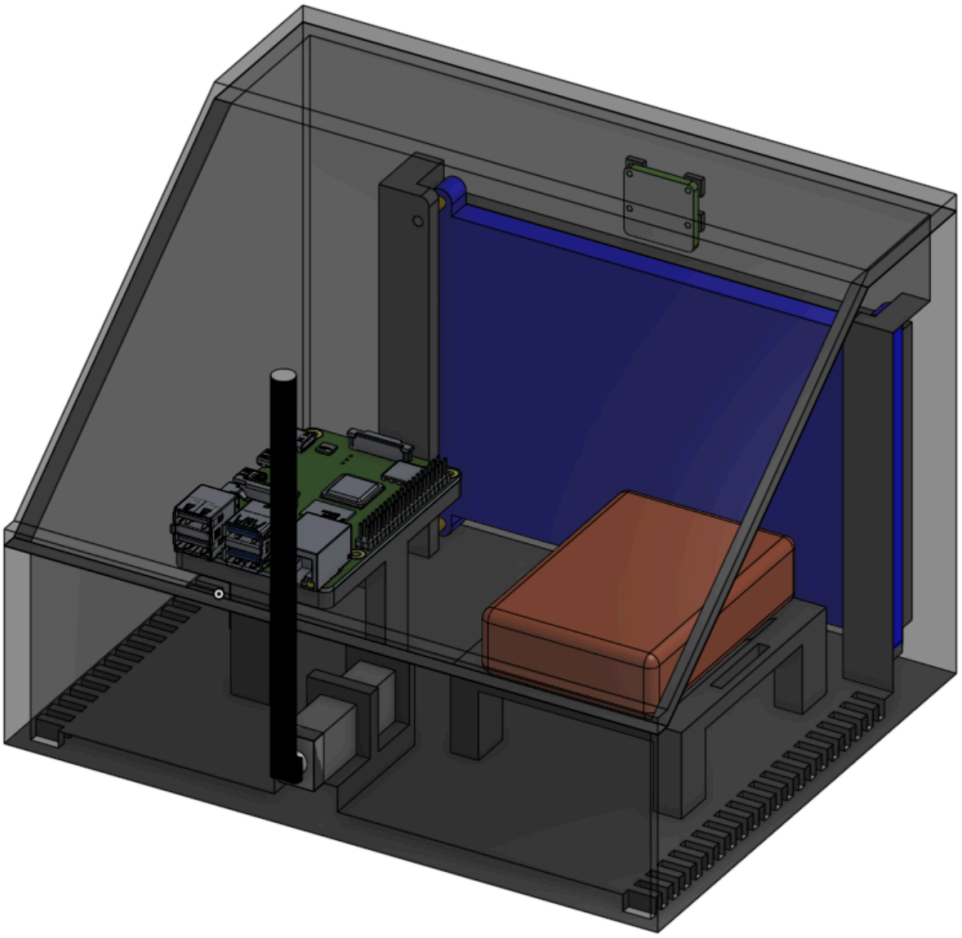

- Everyone present

4/20/2026:

- Did a full system test
  - Everything works together
  - Getting ready for demo on Wednesday
- Got new 3d print, need to sand a few things but everything will work
- Working on final report
  - Updating designs without zigbee since we are not using zigbee anymore
- Updated pick up portal to refresh automatically once a new kid has been added
- Everyone present

4/22/2026:

- Completed our demo today, received positive feedback
- Implementing a few suggestions
    - Announcing kids once they show up
-

- Everyone present

4/27/2026:

- Final presentation